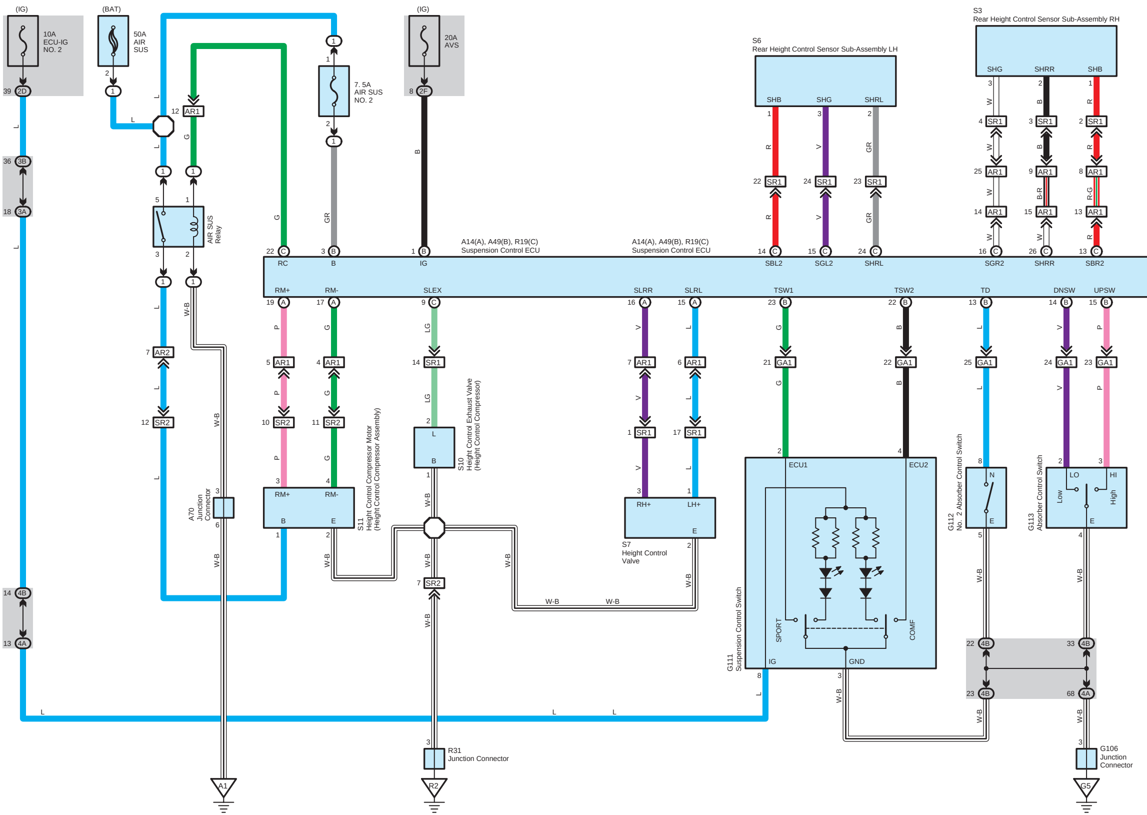
(IG)
10A ECU-IG NO. 2
(BAT)
50A AIR SUS
(IG)
20A AVS
7. 5A AIR SUS NO. 2
39 2D
36 3B
18 3A
14 4B
13 4A
8 2F
12 AR1
AIR SUS Relay
7 AR2
12 SR2
A70 Junction Connector
S6 Rear Height Control Sensor Sub-Assembly LH
SHB SHG SHRL
S3 Rear Height Control Sensor Sub-Assembly RH
SHG SHRR SHB
A14(A), A49(B), R19(C) Suspension Control ECU
RC B IG SBL2 SGL2 SHRL SGR2 SHRR SBR2
RM+ RM- SLEX SLRR SLRL TSW1 TSW2 TD DNSW UPSW
5 AR1
4 AR1
10 SR2
11 SR2
14 SR1
7 AR1
6 AR1
1 SR1
17 SR1
21 GA1
22 GA1
25 GA1
24 GA1
23 GA1
22 SR1
24 SR1
23 SR1
4 SR1
3 SR1
2 SR1
25 AR1
9 AR1
8 AR1
14 AR1
15 AR1
13 AR1
S11 Height Control Compressor Motor (Height Control Compressor Assembly)
RM+ RM- B E
S10 Height Control Exhaust Valve (Height Control Compressor)
L B
7 SR2
S7 Height Control Valve
RH+ LH+ E
G111 Suspension Control Switch
ECU1 ECU2 SPORT COMF IG GND
G112 No. 2 Absorber Control Switch
N E
G113 Absorber Control Switch
LO HI Low High E
22 4B
33 4B
23 4B
68 4A
R31 Junction Connector
G106 Junction Connector
A1
R2
G5
L
G
GR
B
W-B
P
LG
V
R
W
B-R
R-G

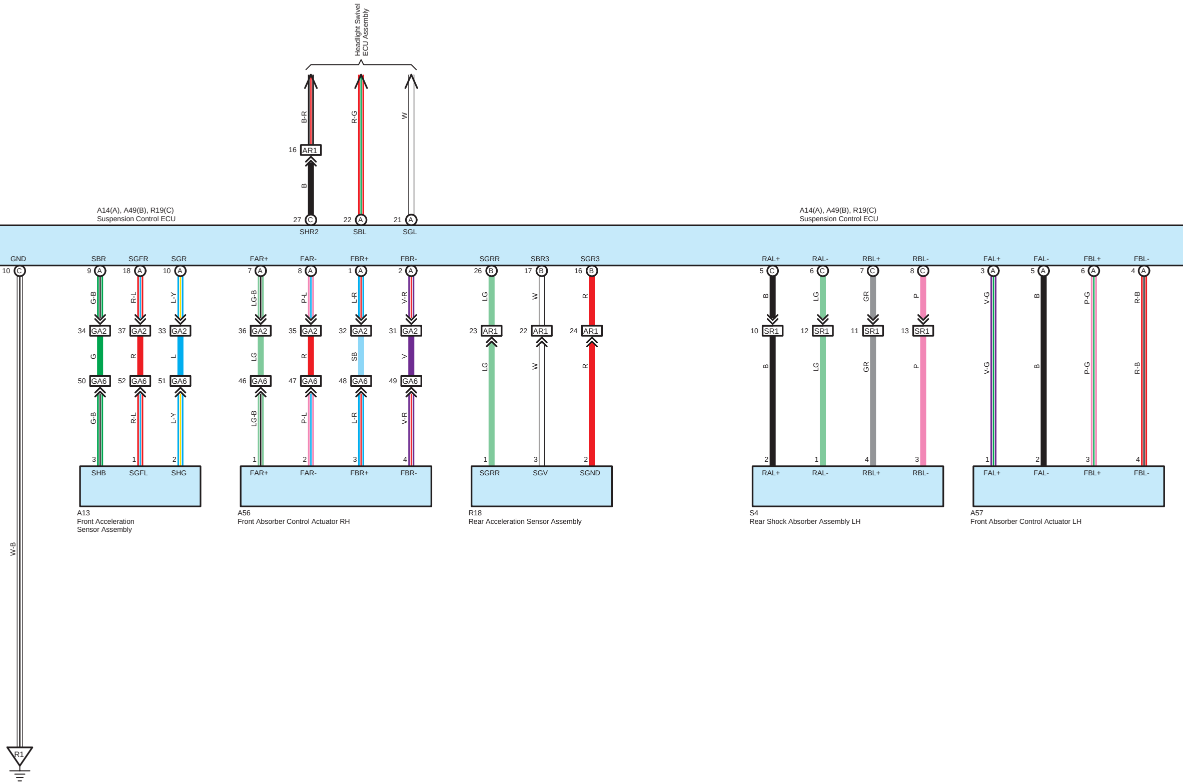
Headlight Swivel ECU Assembly
B-R
R-G
W
16 AR1
B
A14(A), A49(B), R19(C)
Suspension Control ECU
27 C SHR2
22 A SBL
21 A SGL
A14(A), A49(B), R19(C)
Suspension Control ECU
GND
SBR
SGFR
SGR
FAR+
FAR-
FBR+
FBR-
SGRR
SBR3
SGR3
RAL+
RAL-
RBL+
RBL-
FAL+
FAL-
FBL+
FBL-
10 C
9 A
18 A
10 A
7 A
8 A
1 A
2 A
26 B
17 B
16 B
5 C
6 C
7 C
8 C
3 A
5 A
6 A
4 A
G-B
R-L
L-Y
LG-B
P-L
L-R
V-R
LG
W
R
B
LG
GR
P
V-G
B
P-G
R-B
34 GA2
37 GA2
33 GA2
36 GA2
35 GA2
32 GA2
31 GA2
23 AR1
22 AR1
24 AR1
10 SR1
12 SR1
11 SR1
13 SR1
G
R
L
LG
R
SB
V
LG
W
R
B
LG
GR
P
V-G
B
P-G
R-B
50 GA6
52 GA6
51 GA6
46 GA6
47 GA6
48 GA6
49 GA6
G-B
R-L
L-Y
LG-B
P-L
L-R
V-R
3
1
2
1
2
3
4
1
3
2
2
1
4
3
1
2
3
4
SHB
SGFL
SHG
FAR+
FAR-
FBR+
FBR-
SGRR
SGV
SGND
RAL+
RAL-
RBL+
RBL-
FAL+
FAL-
FBL+
FBL-
A13
Front Acceleration Sensor Assembly
A56
Front Absorber Control Actuator RH
R18
Rear Acceleration Sensor Assembly
S4
Rear Shock Absorber Assembly LH
A57
Front Absorber Control Actuator LH
W-B
R1

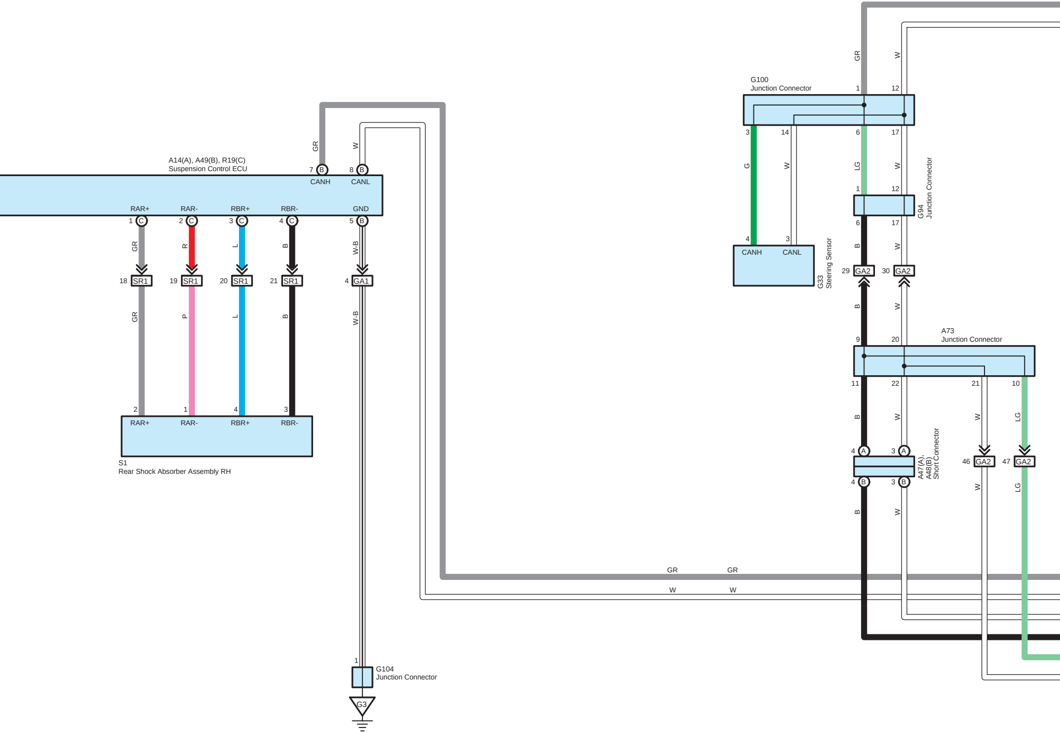
A14(A), A49(B), R19(C)
Suspension Control ECU
GR
W
7 B
8 B
CANH
CANL
RAR+
RAR-
RBR+
RBR-
GND
1 C
2 C
3 C
4 C
5 B
GR
R
L
B
W-B
18 SR1
19 SR1
20 SR1
21 SR1
4 GA1
GR
P
L
B
W-B
2
1
4
3
RAR+
RAR-
RBR+
RBR-
S1
Rear Shock Absorber Assembly RH
1
G104
Junction Connector
G3
GR
W
G100
Junction Connector
1
12
3
14
6
17
G
W
LG
W
1
12
6
17
G94
Junction Connector
4
3
CANH
CANL
G33
Steering Sensor
B
W
29 GA2
30 GA2
B
W
9
20
A73
Junction Connector
11
22
21
10
B
W
W
LG
4 A
3 A
4 B
3 B
A47(A), A48(B)
Short Connector
46 GA2
47 GA2
B
W
W
LG
GR
GR
W
W

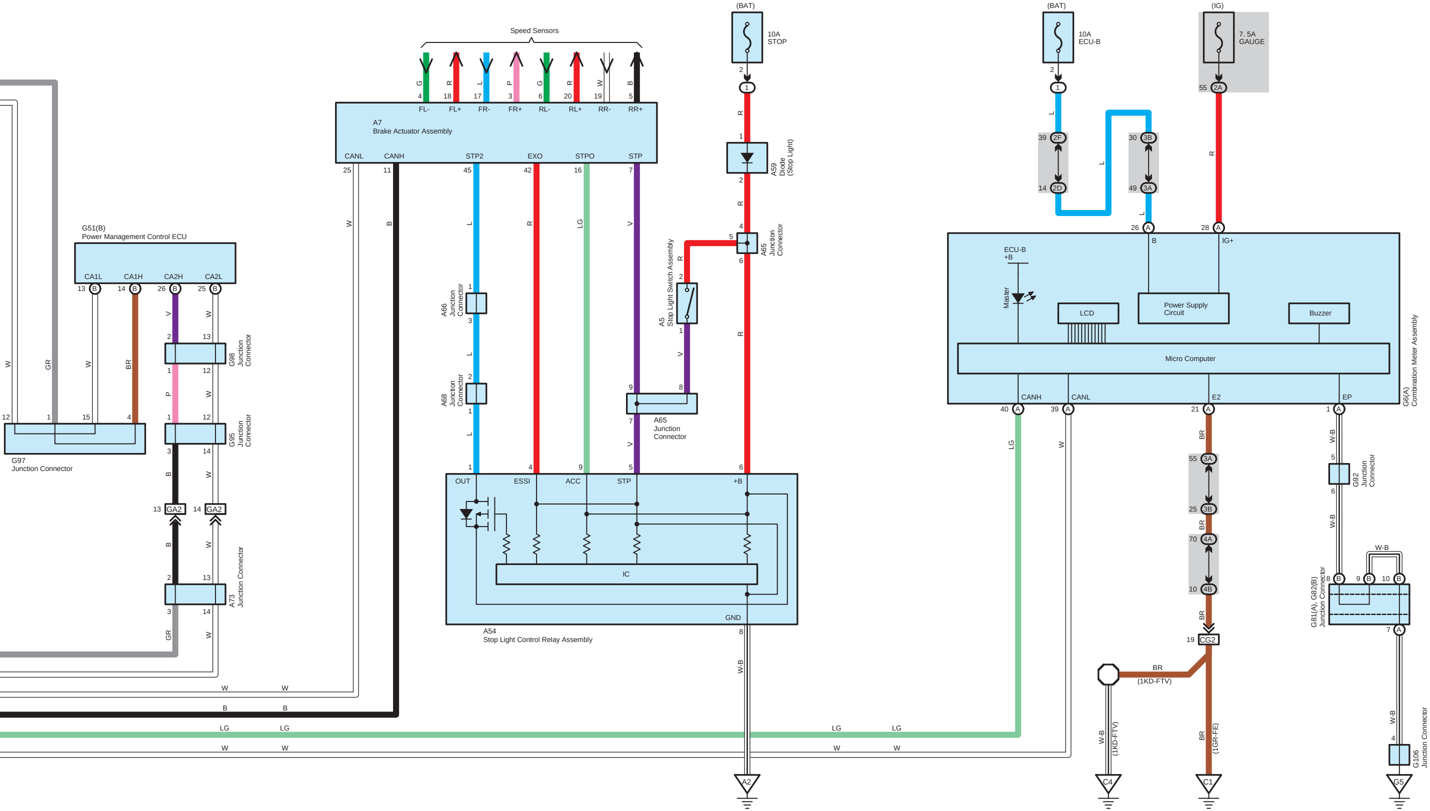
Speed Sensors
G
R
L
P
G
R
W
B
4
18
17
3
6
20
19
5
FL-
FL+
FR-
FR+
RL-
RL+
RR-
RR+
A7
Brake Actuator Assembly
CANL
CANH
STP2
EXO
STPO
STP
25
11
45
42
16
7
(BAT)
10A
STOP
2
1
R
1
A59
Diode
(Stop Light)
2
R
4
5
A65
Junction
Connector
6
R
R
2
A5
Stop Light Switch Assembly
1
V
8
9
A65
Junction
Connector
7
V
W
B
L
R
LG
V
1
A66
Junction
Connector
3
L
2
A68
Junction
Connector
1
L
1
4
9
5
6
OUT
ESSI
ACC
STP
+B
IC
GND
A54
Stop Light Control Relay Assembly
8
W-B
A2
G51(B)
Power Management Control ECU
CA1L
CA1H
CA2H
CA2L
13
B
14
B
26
B
25
B
V
W
2
13
G98
Junction
Connector
1
12
P
W
1
12
G95
Junction
Connector
3
14
B
W
13
GA2
14
GA2
B
W
2
13
A73
Junction Connector
3
14
GR
W
W
GR
W
BR
12
1
15
4
G97
Junction Connector
W
W
B
B
LG
LG
LG
LG
W
W
W
W
(BAT)
10A
ECU-B
2
1
L
39
2F
14
2D
L
30
3B
49
3A
L
26
A
(IG)
7. 5A
GAUGE
55
2A
R
28
A
B
IG+
ECU-B
+B
Master
LCD
Power Supply
Circuit
Buzzer
Micro Computer
CANH
CANL
E2
EP
G6(A)
Combination Meter Assembly
40
A
39
A
21
A
1
A
LG
W
BR
55
3A
25
3B
BR
70
4A
10
4B
BR
19
CG2
BR
(1KD-FTV)
W-B
(1KD-FTV)
C4
BR
(1GR-FE)
C1
W-B
5
G92
Junction
Connector
6
W-B
W-B
8
B
9
B
10
B
G81(A), G82(B)
Junction Connector
7
A
W-B
4
G106
Junction Connector
G5